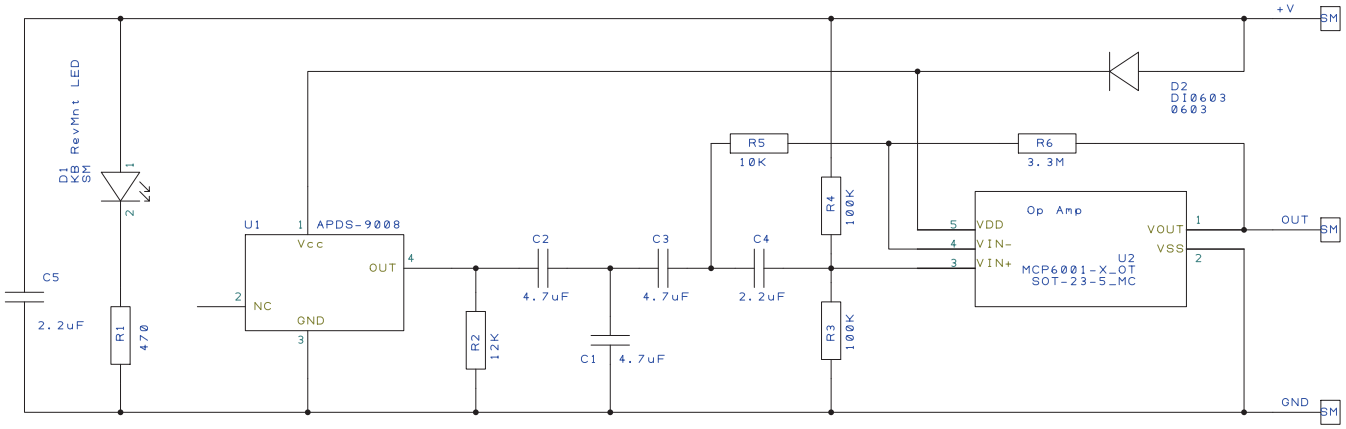

Pulse Sensor Amplified Designed by Joel Murphy Licensed under the TAPR Open Hardware License (www.tapr.org/OHL)

Spring 2012